TEN-60WIN Series ► 60W

DC/DC Converter

- Highest power density 60W converter
- Ultra wide 4:1 input voltage
- Highest efficiency up to 92 %
- Low input current at no load
- Input filter to meet EN55022, class A

Full datasheet in progress

Specifications

Line regulation	0.2 % max.
Load regulation	single output models: 0.5 %, dual output models 1 %
Output voltage adjustment	± 10 % by external resistor (single output models)
Efficiency	91 % typ.
Operating temperature	−40 °C to +85 °C (with derating, tba) optional heatsink
I/O isolation voltage	1500 VDC (60 sec.)
Safety approvals	UL/cUL 60950-1, IEC/EN 60950-1 (pending)
Casing	shielded metal with insulated baseplate
Full datasheet	www.tracopower.com/products/ten60win.pdf

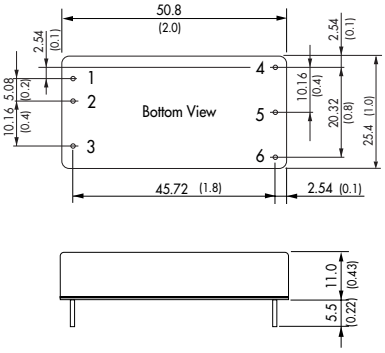

Pin-Out		
Pin	Single	Dual
1	+Vin(Vcc)	+Vin(Vcc)
2	-Vin(GND)	-Vin(GND)
3	Remote On/Off	Remote On/Off
4	+Vout	+Vout
5	-Vout	Common
6	Trim	-Vout

Models

Order code	Input voltage	Output voltage	Output current max.
TEN 60-2410WIN		3.3 VDC	12000 mA
TEN 60-2411WIN		5 VDC	12000 mA
TEN 60-2412WIN		12 VDC	5000 mA
TEN 60-2413WIN	9-36 VDC	15 VDC	4000 mA
TEN 60-2415WIN		24 VDC	2500 mA
TEN 60-2422WIN		± 12 VDC	± 2500 mA
TEN 60-2423WIN		± 15 VDC	± 2000 mA
TEN 60-4810WIN		3.3 VDC	12000 mA
TEN 60-4811WIN		5 VDC	12000 mA
TEN 60-4812WIN		12 VDC	5000 mA
TEN 60-4813WIN	18-75 VDC	15 VDC	4000 mA
TEN 60-4815WIN		24 VDC	2500 mA
TEN 60-4822WIN		± 12 VDC	± 2500 mA
TEN 60-4823WIN		± 15 VDC	± 2000 mA

TEQ-100WIR Series ► 100W

DC/DC Converter

- High power block with excellent thermal convection
- Operating temperature -40 °C up to +85 °C without derating!
- Increased shock & vibration resistance
- Ultra wide 4:1 input voltage
- EN 50155 approval for railway applications
- Excellent efficiency up to 93 %
- Input filter to meet EN 55022, class A

Full datasheet in progress

Specifications

Line regulation	0.2 % max.
Load regulation	0.3 % max.
Output voltage	+10 % / -20 % adjustable by internal potentiometer
Conducted EMI	EN55022, class A (internal filter)
Efficiency	92 % typ.
Operating temperature	−40 °C to +85 °C without derating
Thermal protection	shutdown at 115 °C
I/O isolation voltage	2250 VDC (60 sec.), basic insulation
Safety approvals	UL/cUL 60950-1, IEC/EN 60950-1, EN 50155 (Railway) - pending
Full datasheet	www.tracopower.com/products/teq100wir.pdf

Models

Order code	Input voltage	Output voltage	Output current max.
TEQ 100-2412WIR		12 VDC	8.4 A
TEQ 100-2415WIR	9-36 VDC	24 VDC	4.2 A
TEQ 100-2416WIR		28 VDC	3.6 A
TEQ 100-2418WIR		48 VDC	2.1 A
TEQ 100-4812WIR		12 VDC	8.4 A
TEQ 100-4815WIR	18-75 VDC	24 VDC	4.2 A
TEQ 100-4816WIR		28 VDC	3.6 A
TEQ 100-4818WIR		48 VDC	2.1 A
TEQ 100-7212WIR		12 VDC	8.4 A
TEQ 100-7215WIR	43-160 VDC	24 VDC	4.2 A
TEQ 100-7216WIR		28 VDC	3.6 A
TEQ 100-7218WIR		48 VDC	2.1 A

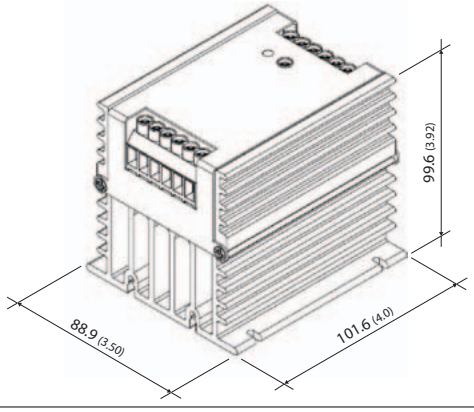

Optional DIN-rail mount adapter